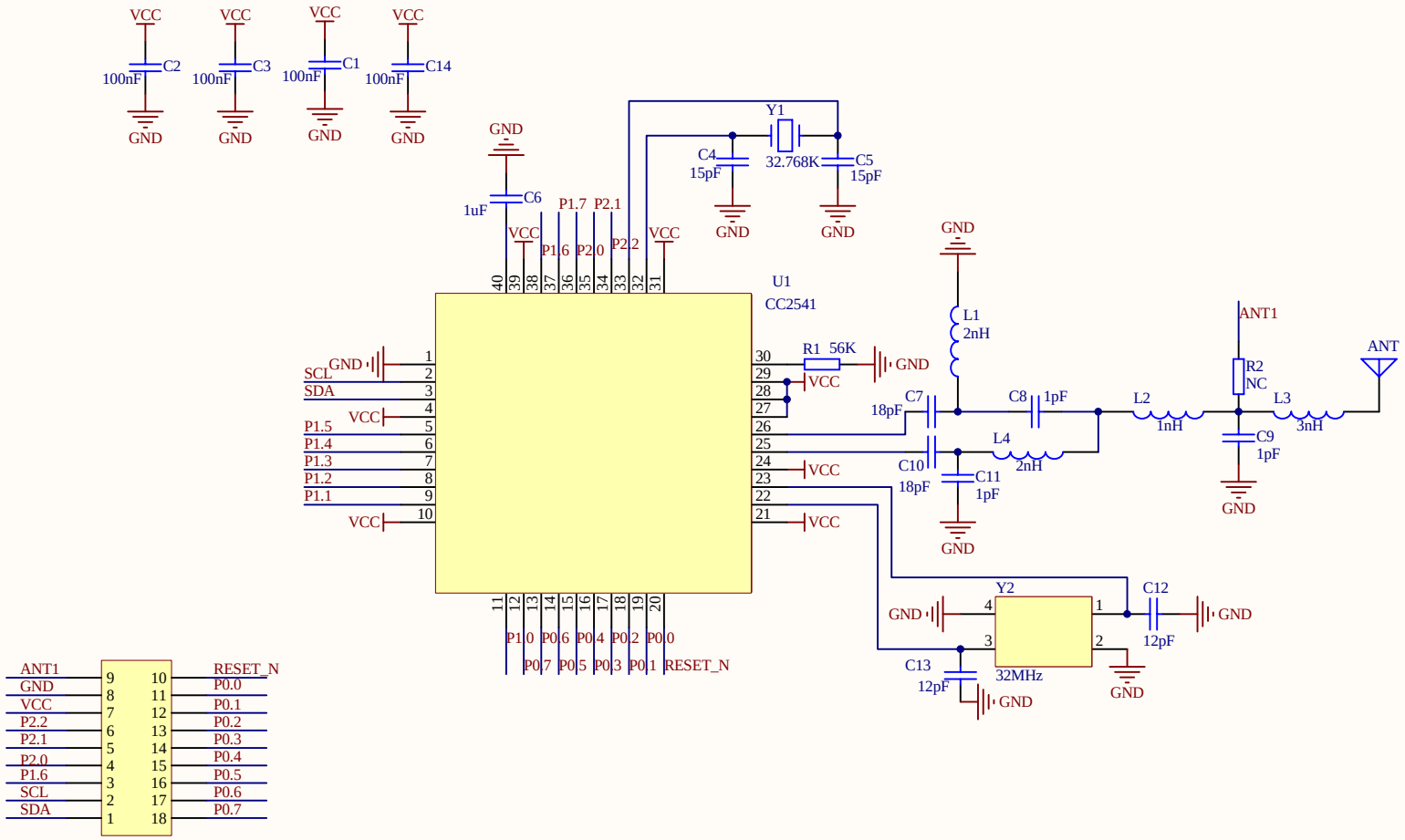

Title: MS47SF1			
Size: A4	Number: 1	Revision: V1.1	
Date: 2014/1/13	Drawn By: Shain	Sheet 1 of 1	
File: F:\HardWare\MS47SFX\MS47SF1\MS47SF1_SCH_V11.SchDoc			

MINEW