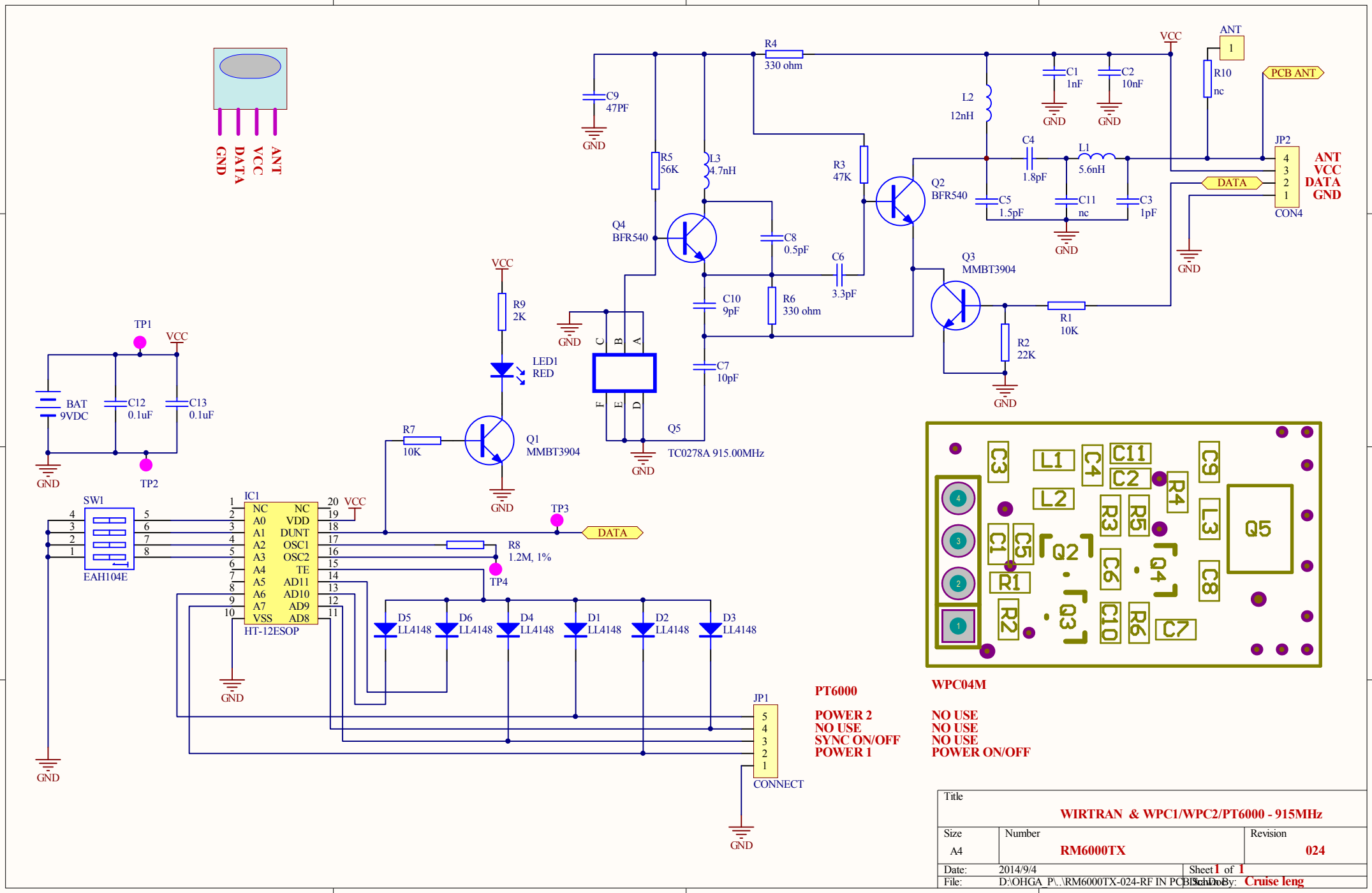
ANT
VCC
DATA
GND
R4
330 ohm
C9
47PF
R5
56K
L3
4.7nH
R3
47K
Q2
BFR540
Q4
BFR540
C8
0.5pF
C6
3.3pF
C10
9pF
R6
330 ohm
C7
10pF
Q5
TC0278A 915.00MHz
Q3
MMBT3904
R1
10K
R2
22K
L2
12nH
C1
1nF
C2
10nF
C4
1.8pF
L1
5.6nH
C5
1.5pF
C11
nc
C3
1pF
R10
nc
ANT
PCB ANT
JP2
CON4
ANT
VCC
DATA
GND
R9
2K
LED1
RED
Q1
MMBT3904
R7
10K
TP1
TP2
TP3
TP4
BAT
9VDC
C12
0.1uF
C13
0.1uF
SW1
EAH104E
IC1
HT-12ESOP
NC
A0
A1
A2
A3
A4
A5
A6
A7
VSS
VDD
DUNT
OSC1
OSC2
TE
AD11
AD10
AD9
AD8
R8
1.2M, 1%
D5
LL4148
D6
LL4148
D4
LL4148
D1
LL4148
D2
LL4148
D3
LL4148
JP1
CONNECT
PT6000
POWER 2
NO USE
SYNC ON/OFF
POWER 1
WPC04M
NO USE
NO USE
NO USE
POWER ON/OFF
Title
WIRTRAN & WPC1/WPC2/PT6000 - 915MHz
Size
A4
Number
RM6000TX
Revision
024
Date:
2014/9/4
Sheet 1 of 1
File:
D:\OHGA_P\..\RM6000TX-024-RF IN PCB.SchDoc
Drawn By:
Cruise leng