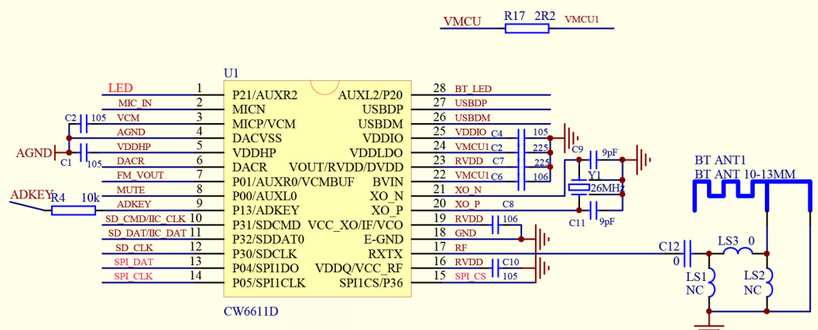

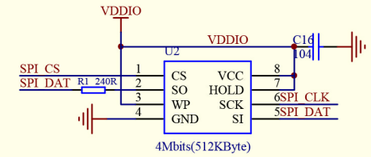

SPI FLASH
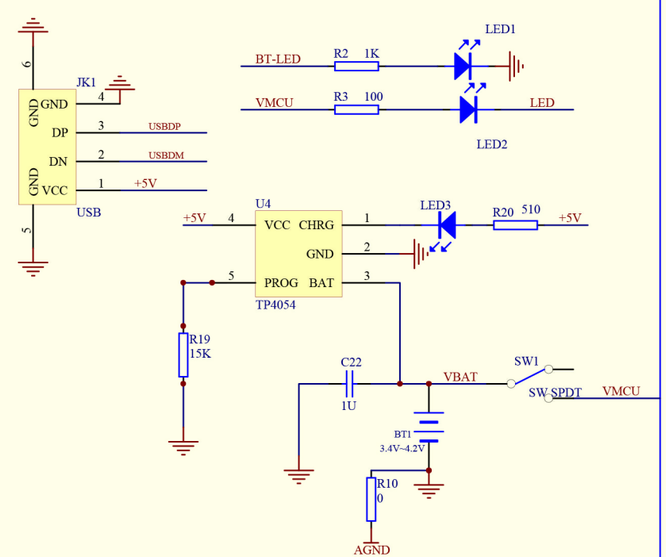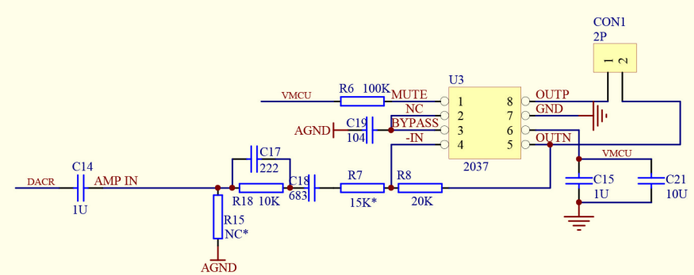
CW6611D