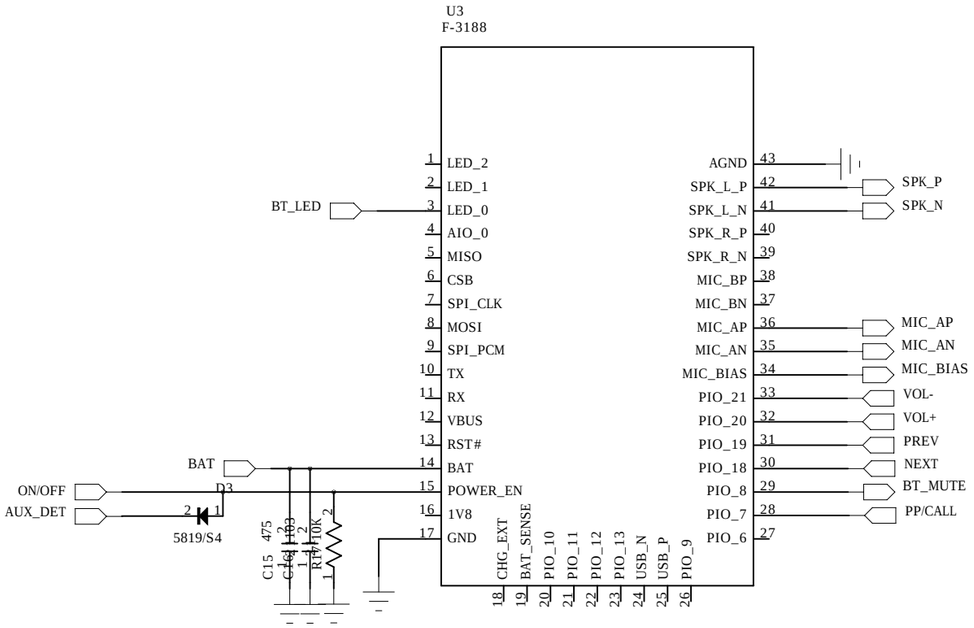
U3
F-3188
LED_2
LED_1
LED_0
AIO_0
MISO
CSB
SPI_CLK
MOSI
SPI_PCM
TX
RX
VBUS
RST#
BAT
POWER_EN
1V8
GND
AGND
SPK_L_P
SPK_L_N
SPK_R_P
SPK_R_N
MIC_BP
MIC_BN
MIC_AP
MIC_AN
MIC_BIAS
PIO_21
PIO_20
PIO_19
PIO_18
PIO_8
PIO_7
PIO_6
BT_LED
SPK_P
SPK_N
MIC_AP
MIC_AN
MIC_BIAS
VOL-
VOL+
PREV
NEXT
BT_MUTE
PP/CALL
BAT
ON/OFF
AUX_DET
D3
5819/S4
C15 475
C16 103
R17 10K
CHG_EXT
BAT_SENSE
PIO_10
PIO_11
PIO_12
PIO_13
USB_N
USB_P
PIO_9

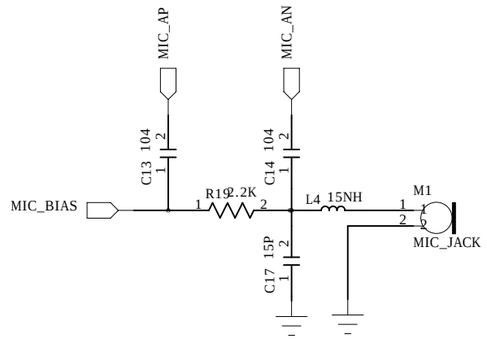
MIC_AP
MIC_AN
C13 104
C14 104
MIC_BIAS
R19 2.2K
L4 15NH
M1
MIC_JACK
C17 15P

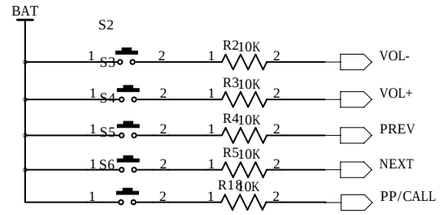
BAT
S2
S3
S4
S5
S6
R2 10K
R3 10K
R4 10K
R5 10K
R18 10K
VOL-
VOL+
PREV
NEXT
PP/CALL

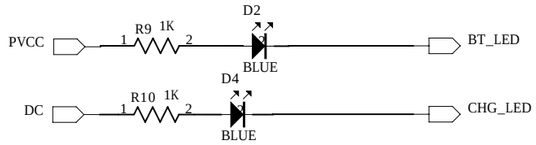
PVCC
R9 1K
D2
BLUE
BT_LED
DC
R10 1K
D4
BLUE
CHG_LED

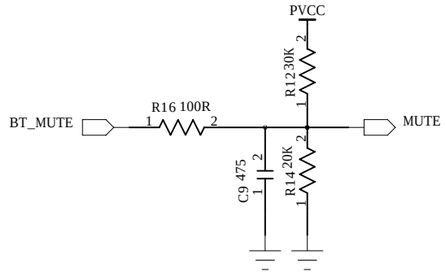
PVCC
R12 30K
BT_MUTE
R16 100R
MUTE
C9 475
R14 20K

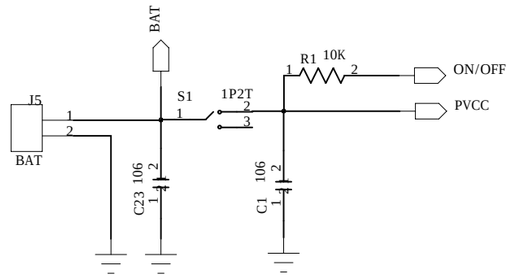
BAT
J5
BAT
S1
1P2T
R1 10K
ON/OFF
PVCC
C23 106
C1 106

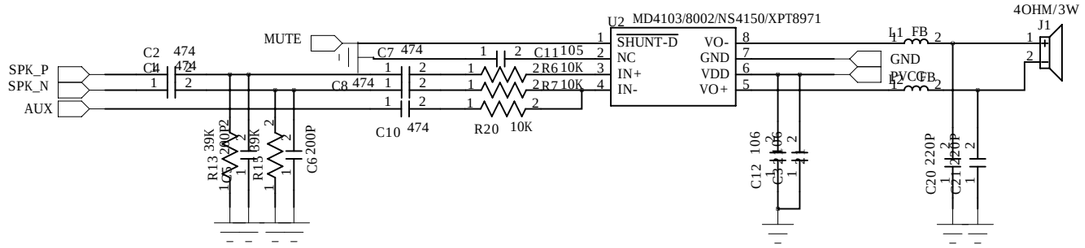
MUTE
SPK_P
SPK_N
AUX
C2 474
C4 474
C7 474
C8 474
C10 474
C11 105
R6 10K
R7 10K
R20 10K
R13 39K
R15 39K
C6 200P
U2 MD4103/8002/NS4150/XPT8971
SHUNT-D
NC
IN+
IN-
VO-
GND
VDD
VO+
GND
PVCC
L1 FB
L2 FB
4OHM/3W
J1
C12 106
C5 106
C20 220P
C21 220P

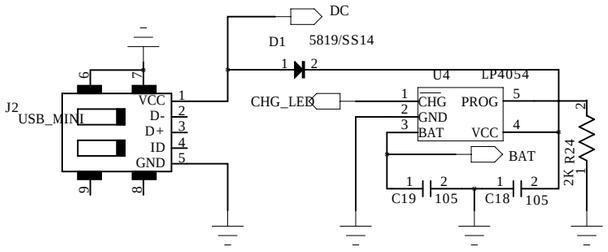
DC
D1 5819/SS14
J2 USB_MINI
VCC
D-
D+
ID
GND
CHG_LED
U4 LP4054
CHG
GND
BAT
PROG
VCC
BAT
C19 105
C18 105
R24 2K

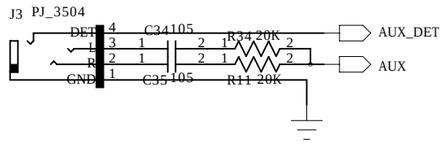
J3 PJ_3504
DET
L
R
GND
C34 105
C35 105
R34 20K
R11 20K
AUX_DET
AUX

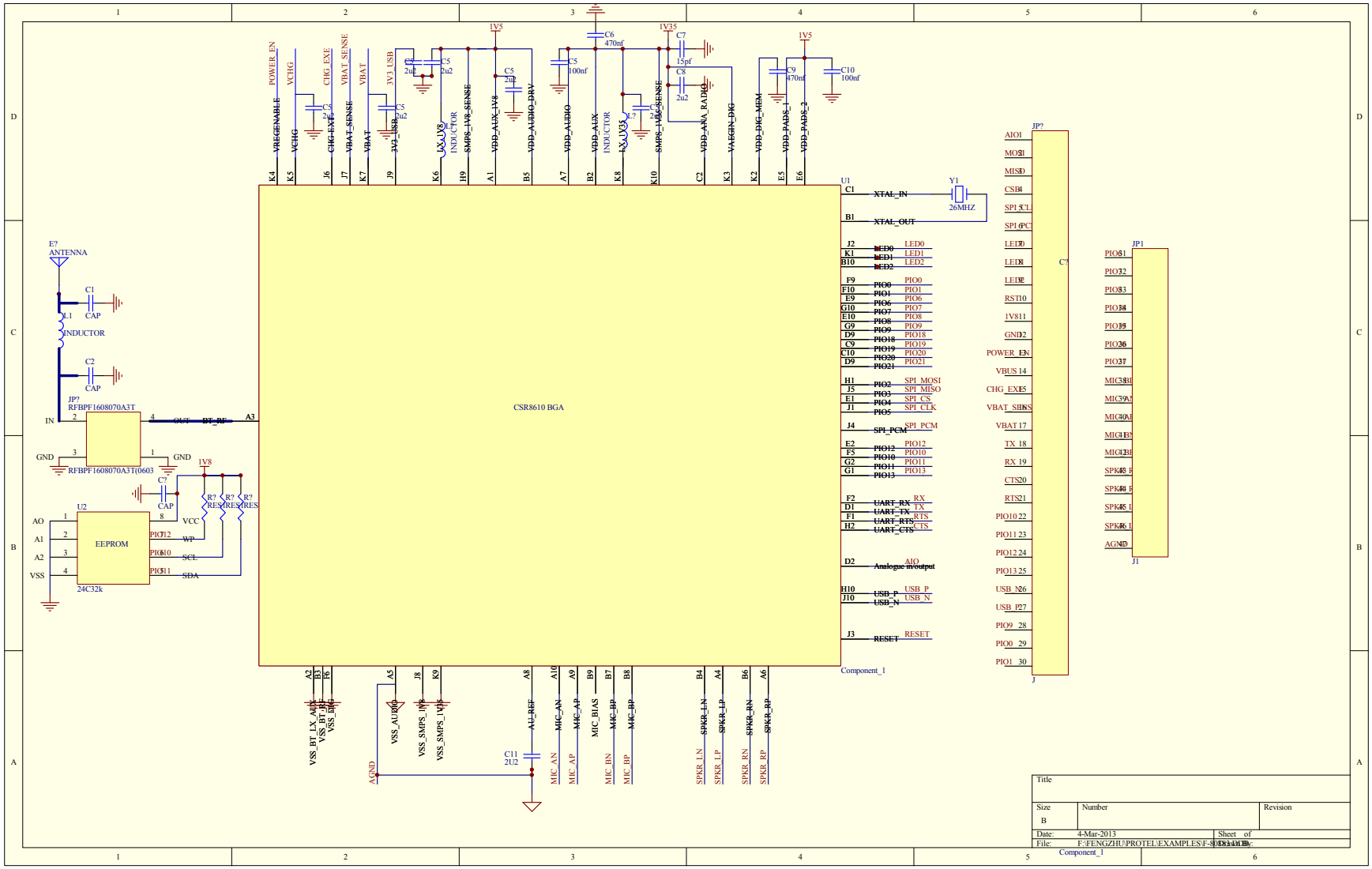
CSR8610 BGA
Component_1
U1
Y1
26MHZ
XTAL_IN
XTAL_OUT
LED0
LED1
LED2
PIO0
PIO1
PIO6
PIO7
PIO8
PIO9
PIO18
PIO19
PIO20
PIO21
SPI_MOSI
SPI_MISO
SPI_CS
SPI_CLK
SPI_PCM
PIO12
PIO10
PIO11
PIO13
RX
TX
RTS
CTS
AIO
Analogue in/output
USB_P
USB_N
RESET
JP?
C?
J
JP1
J1
E?
ANTENNA
L1
INDUCTOR
C1
CAP
C2
CAP
JP?
RFBPF1608070A3T
RFBPF1608070A3T(0603
IN
OUT
BT_RF
A3
GND
1V8
C7
CAP
R?
RES
U2
EEPROM
24C32k
AO
A1
A2
VSS
VCC
WP
SCL
SDA
POWER_EN
VCHG
CHG_EXE
VBAT_SENSE
VBAT
3V3_USB
LX_1V8
INDUCTOR
SMPS_1V8_SENSE
VDD_AUX_1V8
VDD_AUDIO_DRV
VDD_AUDIO
VDD_AUX
LX_1V35
SMPS_1V35_SENSE
VDD_ANA_RADIO
VARGIN_DIG
VDD_DIG_MEM
VDD_PADS_1
VDD_PADS_2
1V5
1V35
C6
470nf
C5
100nf
C9
470nf
C10
100nf
C8
2u2
15pf
C11
2U2
AGND
VSS_BT_LX_AUX
VSS_BT_RF
VSS_DIG
VSS_AUDIO
VSS_SMPS_1V8
VSS_SMPS_1V35
AU_REF
MIC_AN
MIC_AP
MIC_BIAS
MIC_BN
MIC_BP
SPKR_LN
SPKR_LP
SPKR_RN
SPKR_RP
Title
Size
B
Number
Revision
Date:
4-Mar-2013
Sheet of
File:
F:\FENGZHU\PROTEL\EXAMPLES\F-SDK\DEMO.DDB
Drawn by:
Component_1