SPECIFICATION

產 品 型 號: DESC	Φ16*42-7.5uH-0..08*105P-	版本 Rev: A.0	客戶 CUST:	XXX
			客户料号 CUST P/N:	

一、尺寸 DIMENSION:(mm)

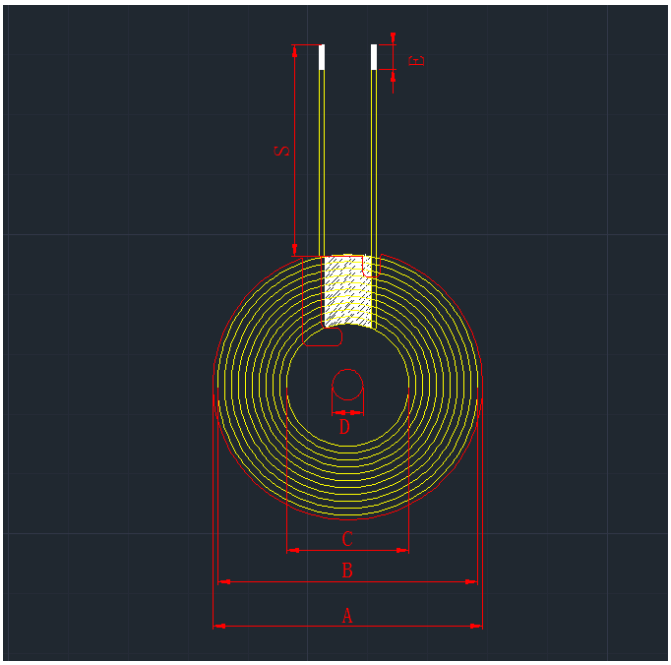

A	43.5±0.5
B	42±1
C	16±0.5
D	5.3±0.5
E	3±1
S	7±1

Note:

1. Cross out wire;
2. Wrap 8mm(ref) width high-temperature adhesive paper 1-2Ts around the outlet position;
3. The coil is attached to the circular hard magnetic disc with groove, the magnetic disc size is 43.5±0.5mm, the inner hole is 5.3mm, and the thickness is 0.5 ±0.1mm.

All measurements were performed radiated and therefore additional antenna gain documentation is not required.