User Manual

Mini PC

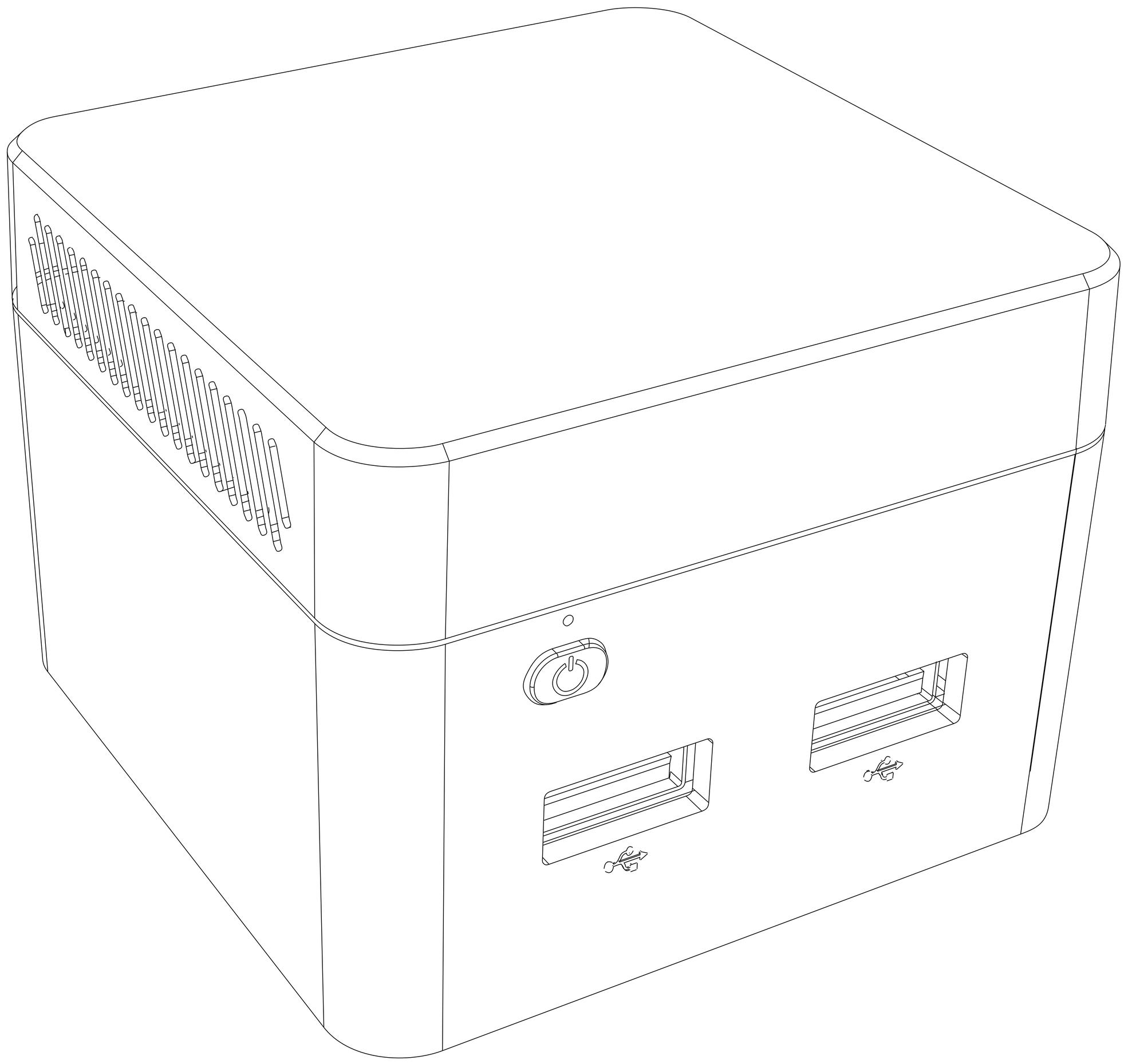

Interfaces And Functions

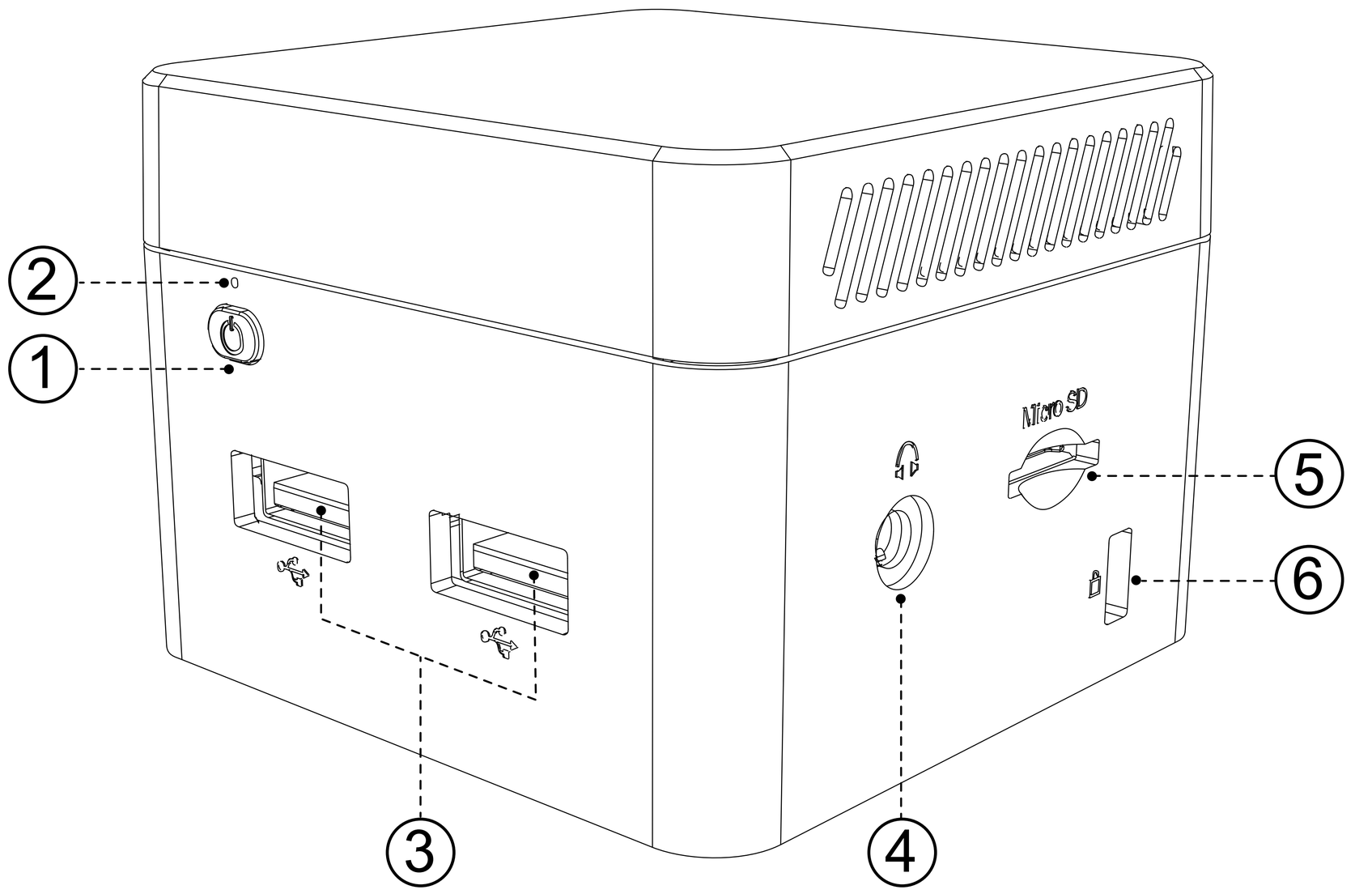

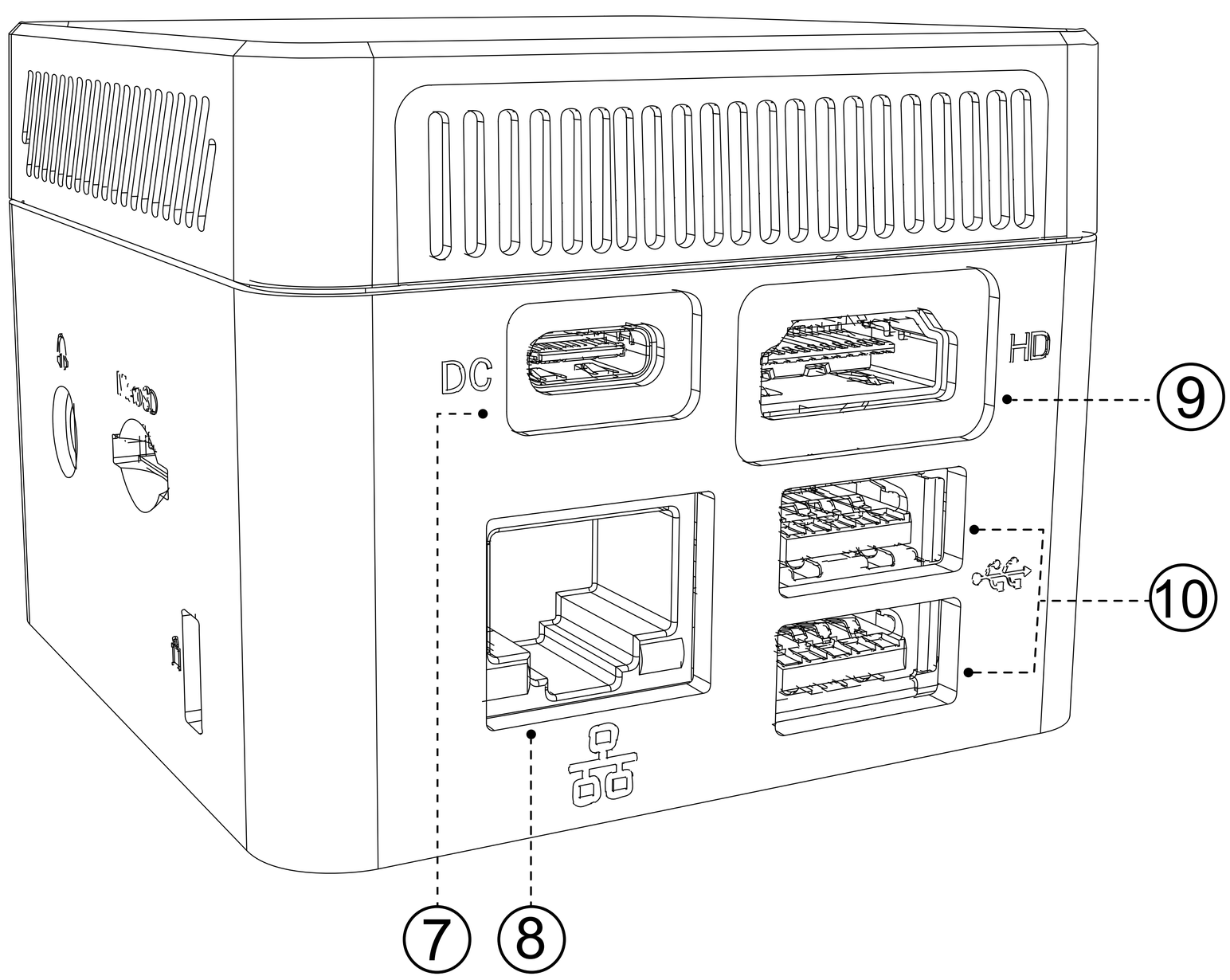

① Power key ② LED ③ USB 2.0 ④ Audio ⑤ TF Card

⑥ Lock Slot ⑦ DC ⑧ LAN ⑨ HDMI ⑩ USB 3.0

Expand Your Storage

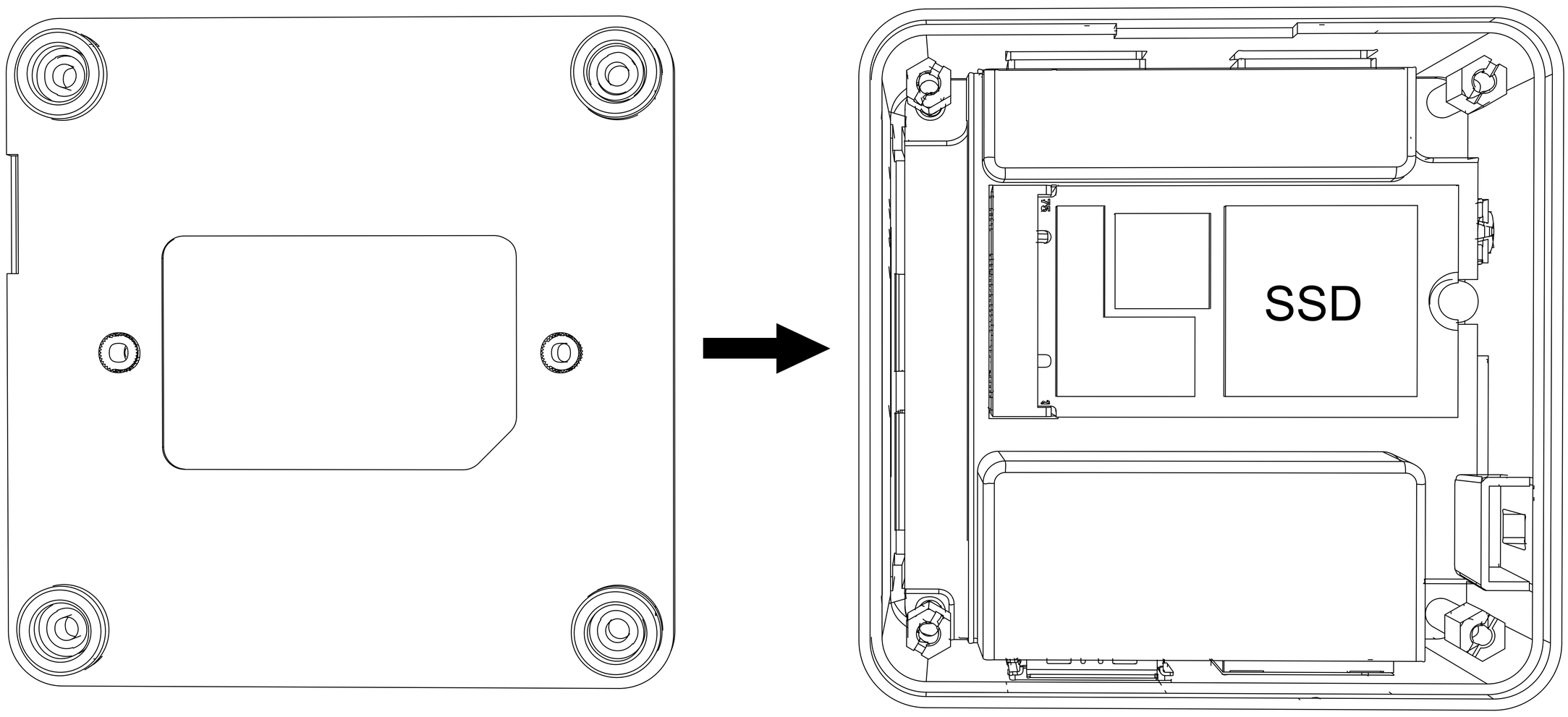

You can install an M.2 SSD, size: 2242, interface protocol: MSATA.

Packaging And Accessories Information

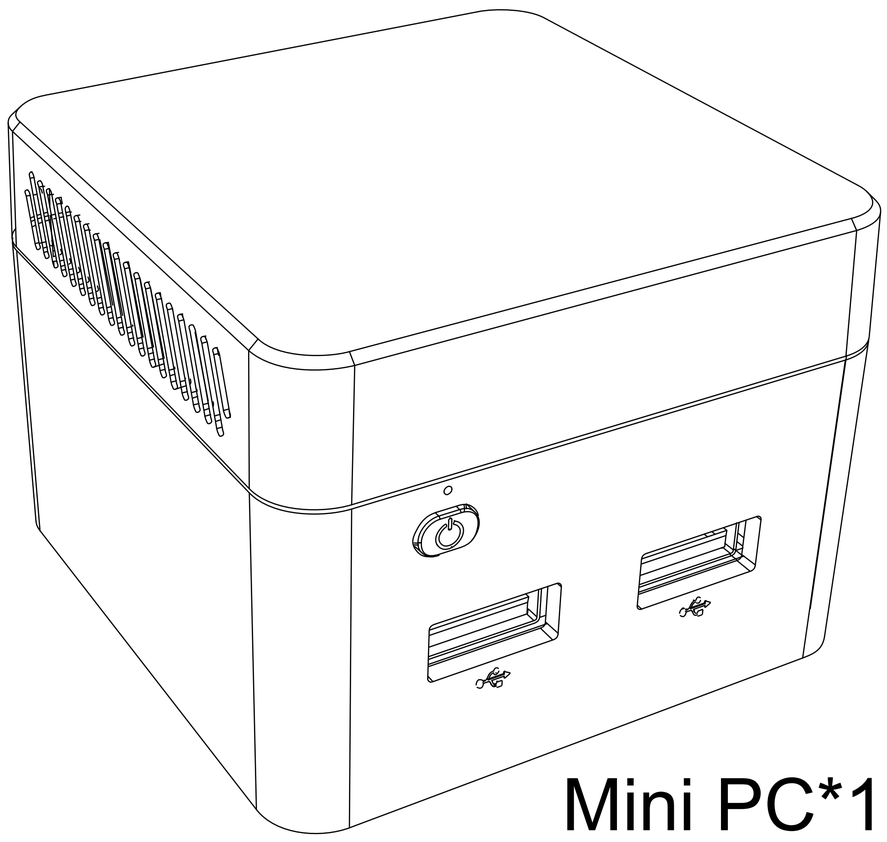

Mini PC*1Pcs

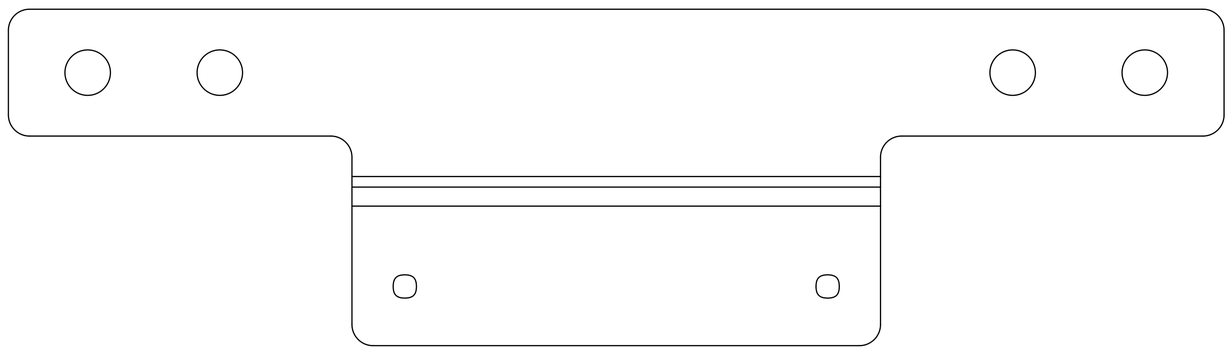

Bracket*1Pcs

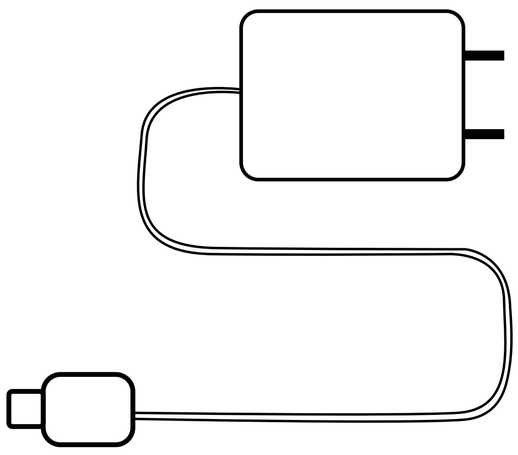

Power Adapter*1Pcs

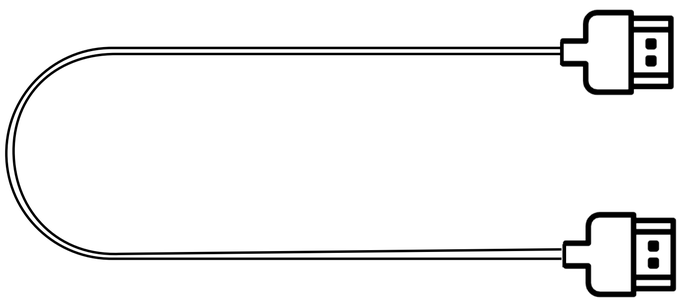

HDMI Cable*1Pcs

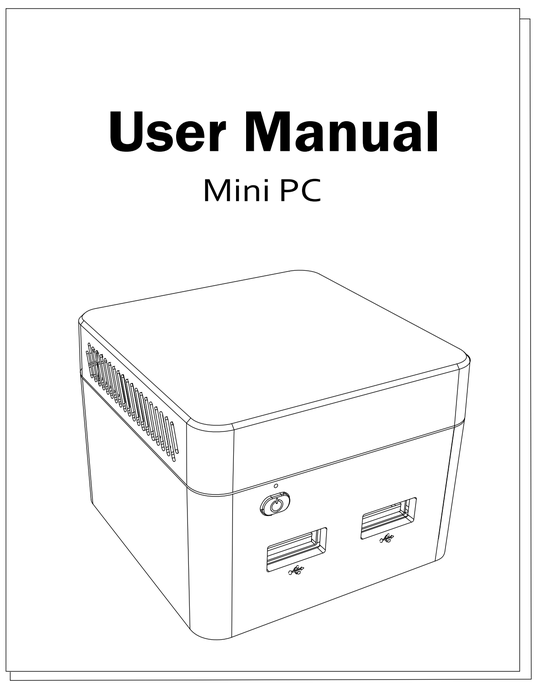

User Manual*1Pcs

Hanging Installation

You can hang the Mini PC on the back of your monitor to make your desktop simpler.

Step 1: Screw the suspension bracket onto the back of the MINI PC.

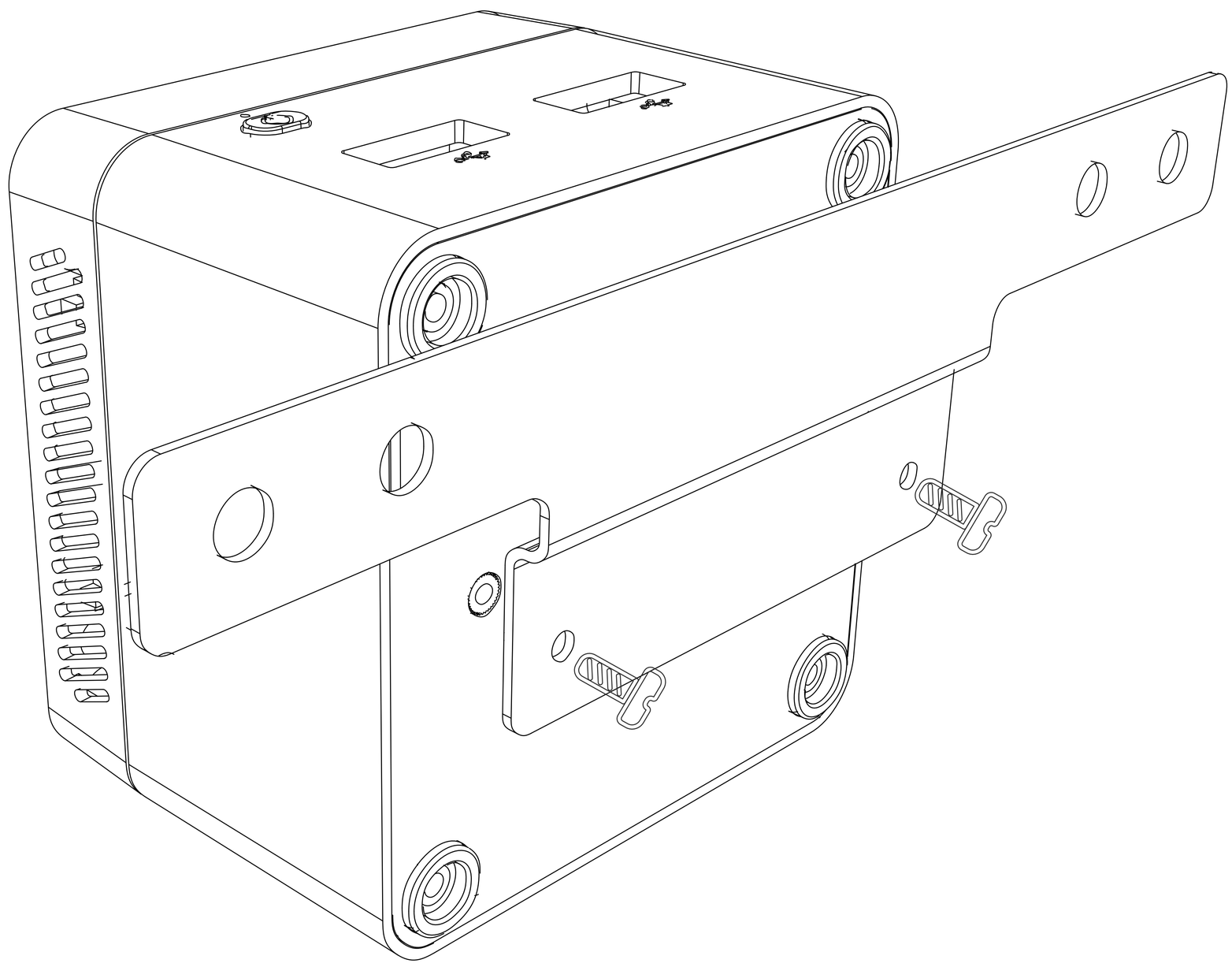

Step 2: Screw the suspension bracket to the back of your monitor.

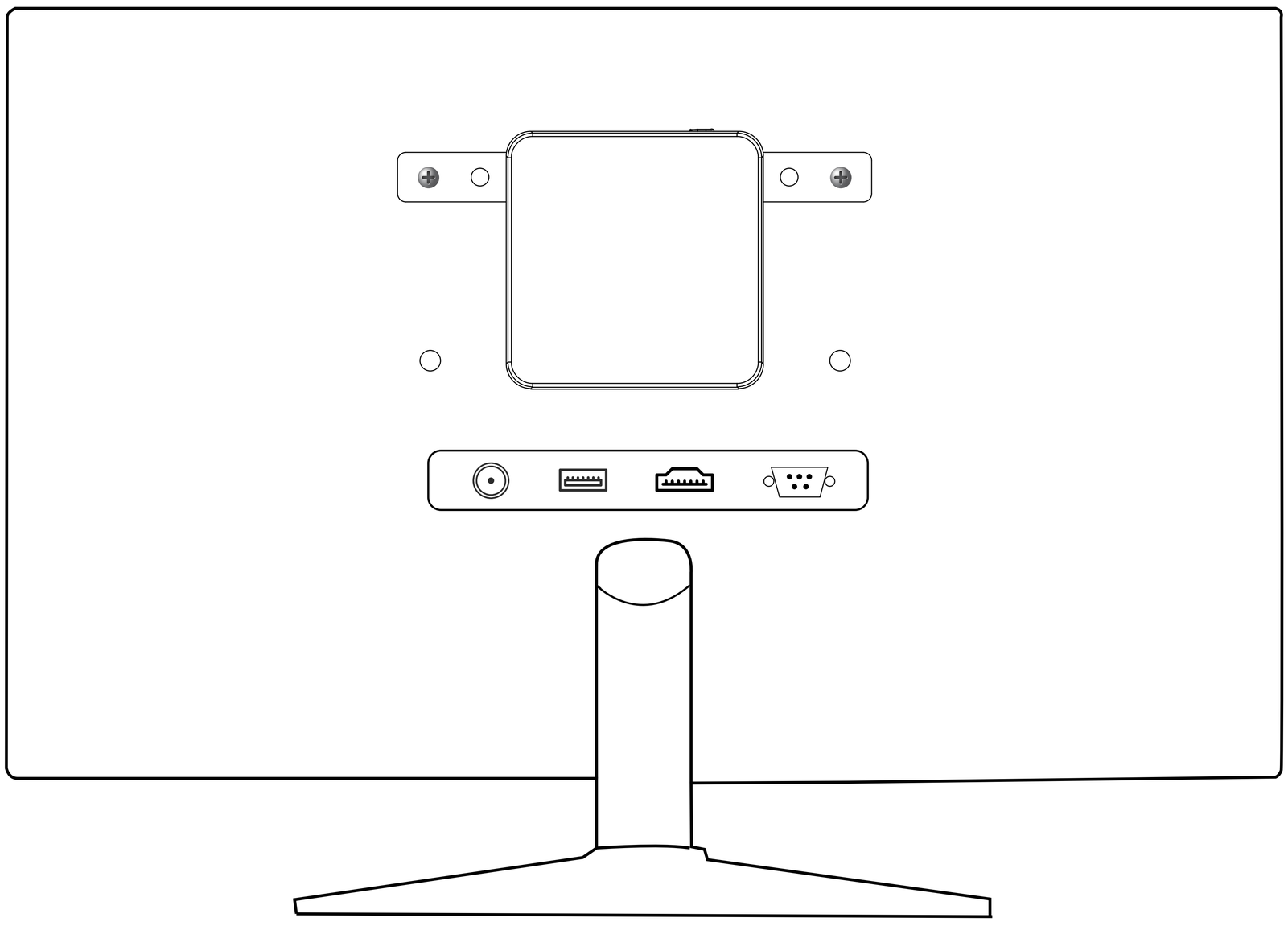

Connecting Peripherals

* Connect one end of the HDMI cable to the MINI PC's HDMI port and the other end to your monitor's HDMI port.
* Plug the power adapter into your power socket and plug the type-c port into the MINI PC's Type-C port (power port).
* Connect your keyboard and mouse (wired or wireless) to this MINI PC.
* This MINI PC has built-in WIFI, and you can also connect your network cable to the MINI PC's network port.

Power On

Press the power button, the blue LED lights up, and then wait about 15 seconds to enter the system

Power OFF

Please do not directly unplug the power to forcibly shut down the power, you can through Windows internal applications to shut down.

Automatic power-on setting

* This MINI PC supports automatic power-on, you can follow the steps below.
* Connect your MINI PC to the power supply, monitor, keyboard and mouse.
* Press the power button and hold down the **Esc** key for about 5 seconds to enter BIOS.
* Move the cursor to the **CHIPSET** option, then move the cursor down to the **South Cluster Configuration** option and press Enter.
* Move the cursor down to the **Miscellaneous Configuration** option, press Enter, then move the cursor down to **Wake On Power(Automatic On)**, press enter.
* Move the cursor up to the **S0 State** option, press Enter to confirm, then press the **F4** key on the keyboard to save and exit.

Reminder

S0 State option supports automatic power-on, **S5 State** option does not support automatic power-on

Hardware Configuration

CPU	Intel Gemini Lake J4125(up to 2.70GHz)
GPU	Intel® UHD Graphics 600(up to 750MHz)
RAM	LPDDR4(4GB/8GB)
Storage	SSD(MSATA/M.2 2242/128GB/256GB/512GB/1T)
Wi-Fi	Intel AC9461/2.4G/5G,WiFi 802.11ac/a/b/g/n
Bluetooth	Intel AC9461/BT5.0
Power Supply	DC 12V 2A
Power Indicator	Power ON:Blue

System Information

OS	Windows 11 Pro
Language	Multi-Language

Precautions For Use

In order to continue to improve the user experience,we may occasionally update app and firmware.

* Do not use harsh of chemical solvent,cleaning products,we recommend using a soft cloth to wipe.
* Do not dispose of by fire,or incinerate,to avoid having fire accident.
* Do not attempt to open the housing or to repair,if a failure occurs,please contact the customer service.
* Please note seepage while clean electronics,be careful of electric shock.
* Check for any frayed or damaged cords or plugs.
* Do not arbitrary discard the product,we should protect the environment.
* Work environment:-10℃~45℃,30%~90% humidity.
* Storage environment:-20℃~60℃,10%~90% humidity.

User Manual

Mini PC

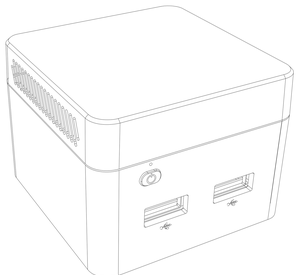

Interfaces And Functions

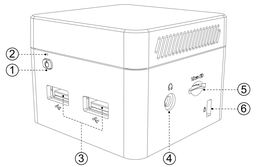

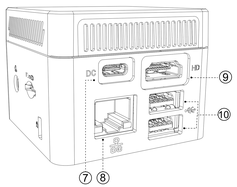

① Power key ② LED ③ USB 2.0 ④ Audio ⑤ TF Card

⑥ Lock Slot ⑦ DC ⑧ LAN ⑨ HDMI ⑩ USB 3.0

❶

Expand Your Storage

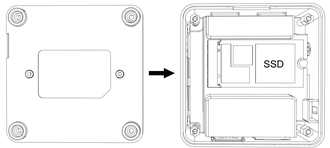

You can install an M.2 SSD, size: 2242, interface protocol: MSATA.

Packaging And Accessories Information

Mini PC*1Pcs

Bracket*1Pcs

Power Adapter*1Pcs

HDMI Cable*1Pcs

User Manual*1Pcs

❷

Hanging Installation

You can hang the Mini PC on the back of your monitor to make your desktop simpler.

Step 1: Screw the suspension bracket onto the back of the MINI PC.

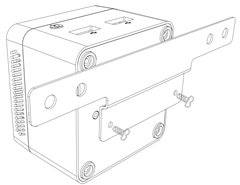

Step 2: Screw the suspension bracket to the back of your monitor.

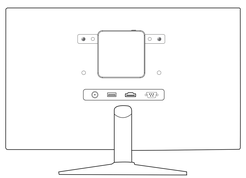

❸

Connecting Peripherals

* Connect one end of the HDMI cable to the MINI PC's HDMI port and the other end to your monitor's HDMI port.
* Plug the power adapter into your power socket and plug the type-c port into the MINI PC's Type-C port (power port).
* Connect your keyboard and mouse (wired or wireless) to this MINI PC.
* This MINI PC has built-in WIFI, and you can also connect your network cable to the MINI PC's network port.

Power On

Press the power button, the blue LED lights up, and then wait about 15 seconds to enter the system

Power OFF

Please do not directly unplug the power to forcibly shut down the power, you can through Windows internal applications to shut down.

Automatic power-on setting

* This MINI PC supports automatic power-on, you can follow the steps below.
* Connect your MINI PC to the power supply, monitor, keyboard and mouse.
* Press the power button and hold down the **Esc** key for about 5 seconds to enter BIOS.
* Move the cursor to the **CHIPSET** option, then move the cursor down to the **South Cluster Configuration** option and press Enter.
* Move the cursor down to the **Miscellaneous Configuration** option, press Enter, then move the cursor down to **Wake On Power(Automatic On)**, press enter.
* Move the cursor up to the **S0 State** option, press Enter to confirm, then press the **F4** key on the keyboard to save and exit.

Reminder

S0 State option supports automatic power-on, **S5 State** option does not support automatic power-on

❹

Hardware Configuration

CPU	Intel Gemini Lake J4125(up to 2.70GHz)
GPU	Intel® UHD Graphics 600(up to 750MHz)
RAM	LPDDR4(4GB/8GB)
Storage	SSD(MSATA/M.2 2242/128GB/256GB/512GB/1T)
Wi-Fi	Intel AC9461/2.4G/5G,WiFi 802.11ac/a/b/g/n
Bluetooth	Intel AC9461/BT5.0
Power Supply	DC 12V 2A
Power Indicator	Power ON:Blue

System Information

OS	Windows 11 Pro
Language	Multi-Language

Precautions For Use

In order to continue to improve the user experience,we may occasionally update app and firmware.

* Do not use harsh of chemical solvent,cleaning products,we recommend using a soft cloth to wipe.
* Do not dispose of by fire,or incinerate,to avoid having fire accident.
* Do not attempt to open the housing or to repair,if a failure occurs,please contact the customer service.
* Please note seepage while clean electronics,be careful of electric shock.
* Check for any frayed or damaged cords or plugs.
* Do not arbitrary discard the product,we should protect the environment.
* Work environment:-10℃~45℃,30%~90% humidity.
* Storage environment:-20℃~60℃,10%~90% humidity.

❺

75X110MM

FCC Warning

This device complies with part 15 of the FCC rules. Operation is subject to the following two conditions: (1) this device may not cause harmful interference, and (2) this device must accept any inte rference received, including interference that may cause undesired operation.

Changes or modifications not expressly approved by the party responsible for compliance could void the user's authority to operate the equipment.

NOTE: This equipment has been tested and found to comply with the limits for a Class B digital device, pursuant to part 15 of the FCC Rules. These limits are designed to provide reasonable protection against harmful interference in a residential installation. This equipment generates uses and can radiate radio frequency energy and, if not installed and used in accordance with the instructions, may cause harmful interference to radio communications. However, there is no guarantee that interference will not occur in a particular installation. If this equipment does cause harmful interferenceto radio or television reception, which can be determined by turning the equipment off and on, the user is encouraged to try to correct the interference by one or more of the following measures:

- Reorient or relocate the receiving antenna.
- Increase the separation between the equipment and receiver.
- Connect the equipment into an outlet on a circuit different from that to which the receiver is connected.
- Consult the dealer or an experienced radio/TV technician for help.

Radiation Exposure Statement

This equipment complies with FCC radiation exposure limits set forth for an uncontrolled environment. This equipment should be installed and operated with minimum distance 20cm between the radiator and your body.