2021/6/20

DanBaoLe™

M-AGNETIC TRUCK

MAGNETIC DIY ASSEMBLY ENGINEERING VEHICLE

WARNING:
CHOKING HAZARD - Small parts.
Not for children under 3 years.

3+AGES

FUN SOUND

MAGNETIC SHEET ASSEMBLE

CONTAINS THE LIGHT

PROGRAMMING CONTROL >>>

REMOTE CONTROL

PROGRAMMING CONTROL

MULTIVARIANT STYLE CREATIVE WISDOM

IMPORTANT BATTERY INFORMATION

- Non-rechargeable batteries are not to be recharged;
- Rechargeable batteries are to be removed from the toy before being charged;
- Rechargeable batteries are only to be charged under adult supervision;
- Different types of batteries or new and used batteries are not to be mixed;
- Batteries are to be inserted with the correct polarity;
- Exhausted batteries are to be removed from the toy;
- The supply terminals are not to be short-circuited.
- Open the battery cover of the toys with screwdriver, and then insert the batteries into the battery compartment, then close the battery cover with screwdriver, and tighten the screw;
- The packaging has to be kept since it contains important information.

- Do not mix old and new batteries.
- Do not mix alkaline batteries, standard (carbon-zinc) or rechargeable (Nickel-Cadmium) batteries.

BATTERY INSTALLATION

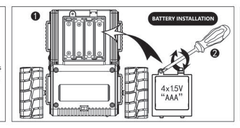

BATTERY INSTALLATION

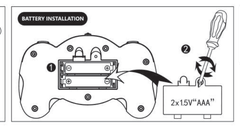

PRECAUCIONES:
PELIGRO DE AHOGARSE.
Contiene partes pequeñas.
No recomendado para niños menores de 3 años.

شهادة المطابقة الخليجية
Gulf Conformity Mark

WARNING:
CHOKING HAZARD - Small parts.
Not for children under 3 years.

NOT SUITABLE FOR CHILDREN UNDER 3 YEARS DUE TO SMALL PARTS
تحذير: غير صالح للأطفال دون سن الثالثة بسبب صغر الأجزاء
يحتوي على أجزاء صغيرة يشكل ابتلاعها خطرا على الأطفال دون الثالثة من العمر
COUNTRY OF ORIGIN: CHINA
بلد المنشأ: الصين

SPECIFICATIONS COLOURS AND CONTENTS MAY VARY FROM ILLUSTRATIONS

SHANTOU BANBAOLE TECHNOLOGYCO.,LTD
Liannan Trade City Lianxia town,
Chenghai District, Shantou City, Guangdong

NO. U501
MADE IN CHINA

FCC Warning:
Any Changes or modifications not expressly approved by the party responsible for compliance could void the user's authority to operate the equipment.
This device complies with part 15 of the FCC Rules. Operation is subject to the following two conditions:
(1) This device may not cause harmful interference, and
(2) this device must accept any interference received, including interference that may cause undesired operation.
Note: This equipment has been tested and found to comply with the limits for a Class B digital device, pursuant to part 15 of the FCC Rules. These limits are designed to provide reasonable protection against harmful interference in a residential installation. This equipment generates uses and can radiate radio frequency energy and, if not installed and used in accordance with the instructions, may cause harmful interference to radio communications. However, there is no guarantee that interference will not occur in a particular installation. If this equipment does cause harmful interference to radio or television reception, which can be determined by turning the equipment off and on, the user is encouraged to try to correct the interference by one or more of the following measures:
-Reorient or relocate the receiving antenna.
-Increase the separation between the equipment and receiver.
-Connect the equipment into an outlet on a circuit different from that to which the receiver is connected.
-Consult the dealer or an experienced radio/TV technician for help.
This equipment complies with FCC radiation exposure limits set forth for an uncontrolled environment. This equipment should be installed and operated with minimum distance 20cm between the radiator & your body.

M-AGNETIC TRUCK

MAGNETIC DIY ASSEMBLY ENGINEERING VEHICLE

MULTIVARIANT STYLE CREATIVE WISDOM

APP

MOBILE PHONE REMOTE CONTROL
CONNECT BLUETOOTH

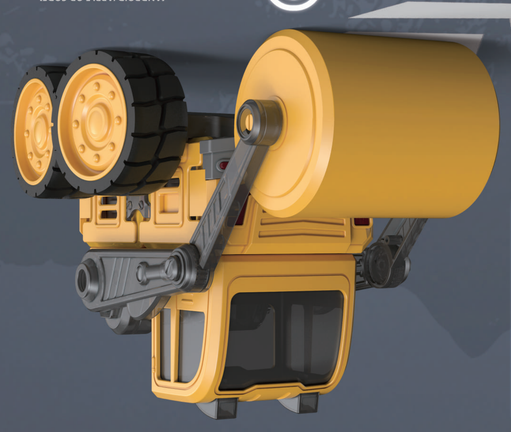

APP

MOBILE PHONE REMOTE CONTROL
CONNECT THE BLUETOOTH

REMOTE CONTROL BUTTON DESCRIPTION

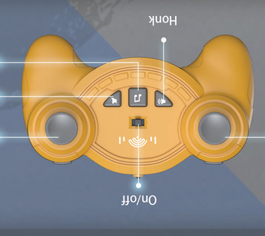

1. Push forward: go forward. Push back: go back
2. Push forward, at the same time the right lever turn left: the car go forward + turn left
3. Push forward, at the same time the right lever turn right: the car go forward + turn right
4. Push back, at the same time the right lever turn left: the car retreat + turn left
5. Push back, at the same time the right lever turn right: the car retreat + turn right

Turn left: the car turns left at the same place
Turn right: the car turns right in situ

Blue button, press the sound to stop playing

Music play/switch button, each time press it to switch a music and play it in loop

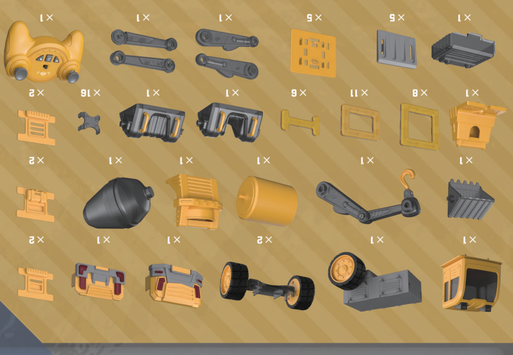

PROGRAMMING CONTROL

MOBILE PHONE REMOTE CONTROL
SCAN CODE TO DOWNLOAD

[ANDROID/APPLE QR CODE]

APTER DOWNLOADING THE CODE, YOU CAN CHOOSE DOWNLOAD ANDROID/APPLE VERSION

PLUMBING
Degrees make assembling more fun

EMULATION
A variety of modeling style

MOVEABLE
The joints can be freely for movements

MOVEABLE
Improve children's learning ability